REVISIONS			
REV	DESCRIPTION	DATE	APPROVED

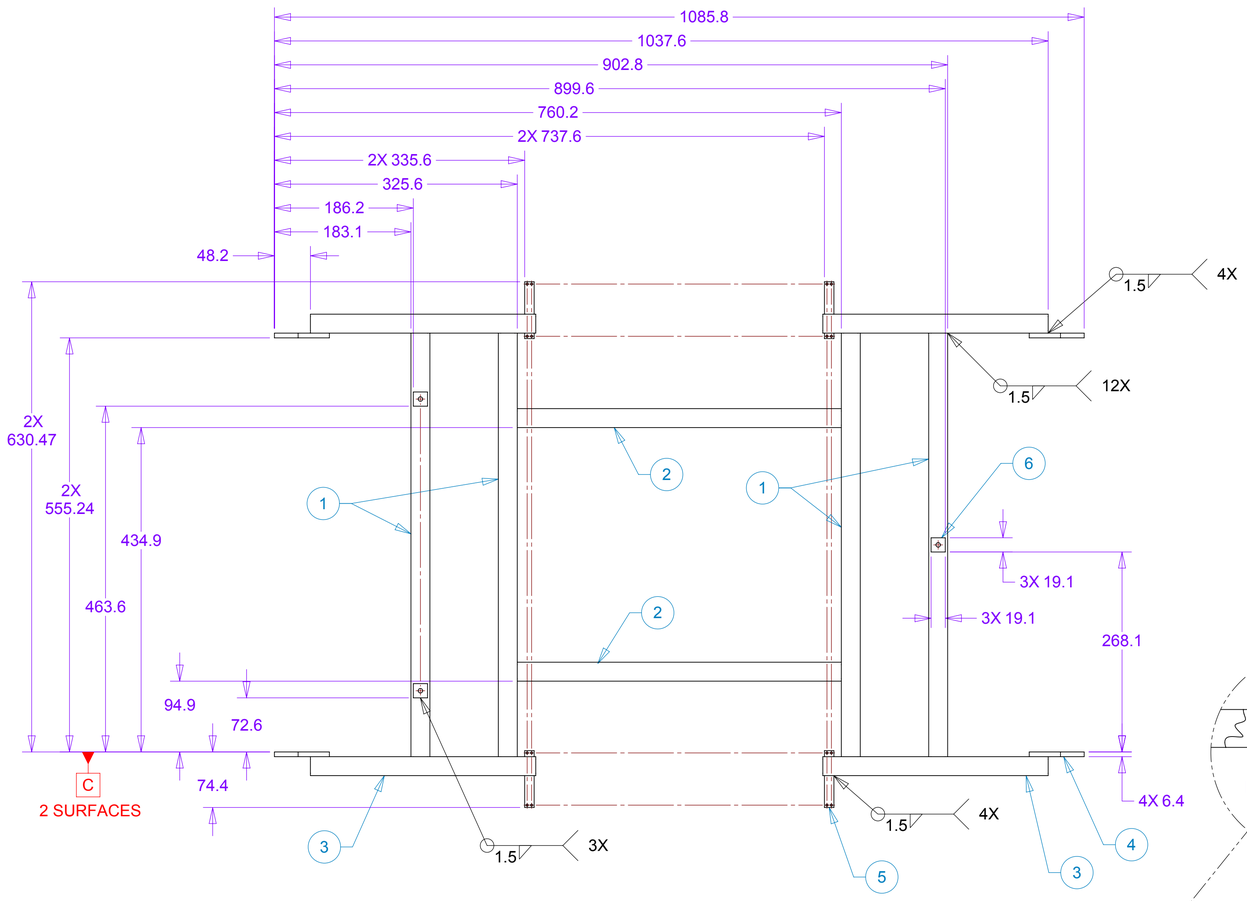

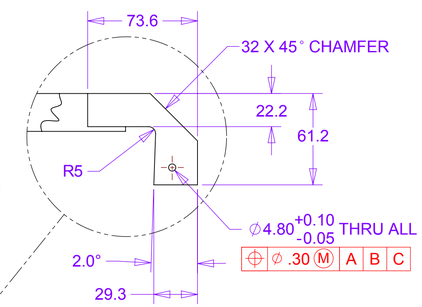

DETAIL B
SCALE 1 : 2
VIEW TYP 2X

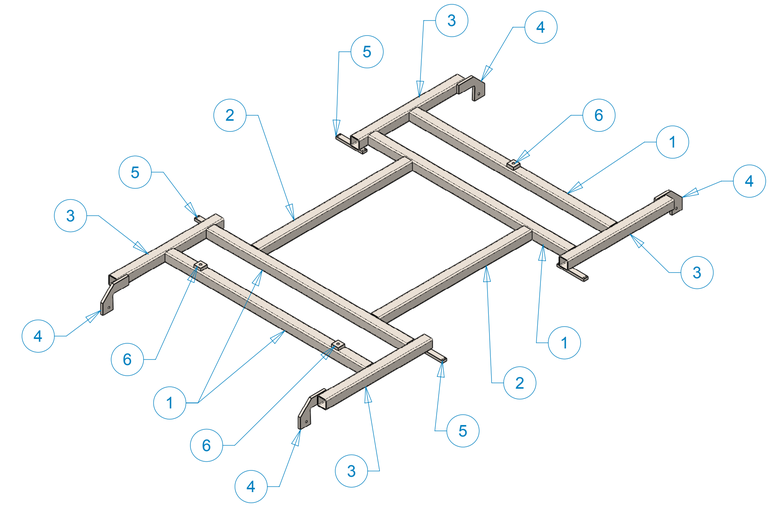

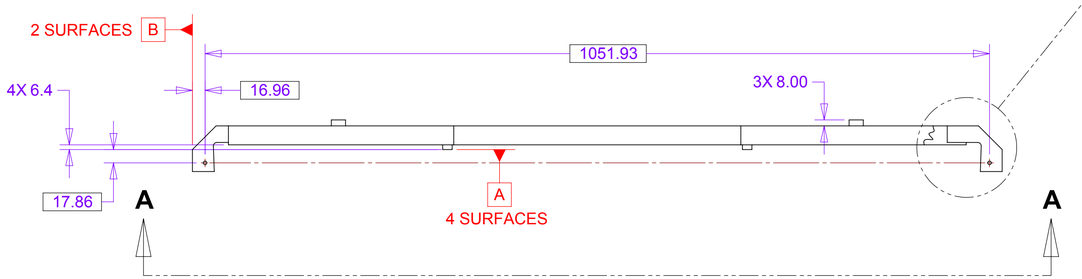

Weldment Cut List				
ITEM NO.	QTY.	DESCRIPTION	LENGTH	MATERIAL
1	4	SQUARE TUBE, 1.0" X 1.0" X .06" WALL	567.94	A36 STEEL
2	2	SQUARE TUBE, 1.00" X 1.00" X .06" WALL	434.60	A36 STEEL
3	4	SQUARE TUBE, 1.0" X 1.0" X .06" WALL	302.17	A36 STEEL
4	4	PLATE		A36 STEEL
5	4	FVTX CAGE CARRIER TAB		A36 STEEL
6	3	THUMB SCREW BLOCK		A36 STEEL

NOTES: UNLESS OTHER WISE SPECIFIED

1. ALL DIMENSIONS IN MILLIMETERS
2. DIMENSIONS AND TOLERANCING PER ASME Y14.5M-1994
3. REMOVE ALL BURRS AND BREAK SHARP EDGES TO A MAXIMUM OF .4
4. COUNTERSINK 82 DEGREES ALL TAPPED HOLES TO MAJOR DIAMETER
5. COUNTERSINK 82 DEGREES APPROXIMATELY .08/1.5 DEEP ALL DRILLED HOLES
7. DO NOT POWDER COAT THREADED HOLES, THROUGH HOLES OR OTHER DESIGNATED SURFACES

THIS DOCUMENT CONTAINS INFORMATION THAT IS THE PROPRIETARY PROPERTY OF HYTEC, INC. REPRODUCTION, DISCLOSURE, OR RELEASE TO OTHERS, MANUALLY OR ELECTRONICALLY, IS STRICTLY PROHIBITED WITHOUT THE PRIOR WRITTEN CONSENT OF HYTEC, INC.

HYTEC RELEASED DOCUMENT

THIRD ANGLE PROJECTION

UNLESS OTHERWISE SPECIFIED: DIMENSIONS ARE IN MILLIMETERS
-TOLERANCES-
DECIMALS
.X = +/- .5
.X = +/- .1
.XX = +/- .01
.XXX = +/- .001
ANGULAR
.X = +/- 30'
.XX = +/- 15'
SURFACE FINISH = 250

CAD GENERATED DRAWING, DO NOT MANUALLY UPDATE DO NOT SCALE DRAWING

FINISH: POWDER COAT TIGER DRYLAC 38/10003

PART NO. 111-PHX-01-5212-1

	SIGNATURE	DATE
Designer	Roger L Smith	3/16/2010
Drawn	Roger L Smith	3/16/2010
Checked	Walt Sondheim	5/25/2010
Engineer	RJ Ponchione	3/16/2010
Approved	Walt Sondheim	5/25/2010

HYTEC, INC

TITLE: PHENIX CENTRAL UPGRADE FVTX SYSTEM ASSEMBLING FIXTURE CARRY FRAME

DWG. NO. 111-PHX-01-5212 | SIZE D | SHEET NO. 1 of 2

SCALE 1:4 | REVISION

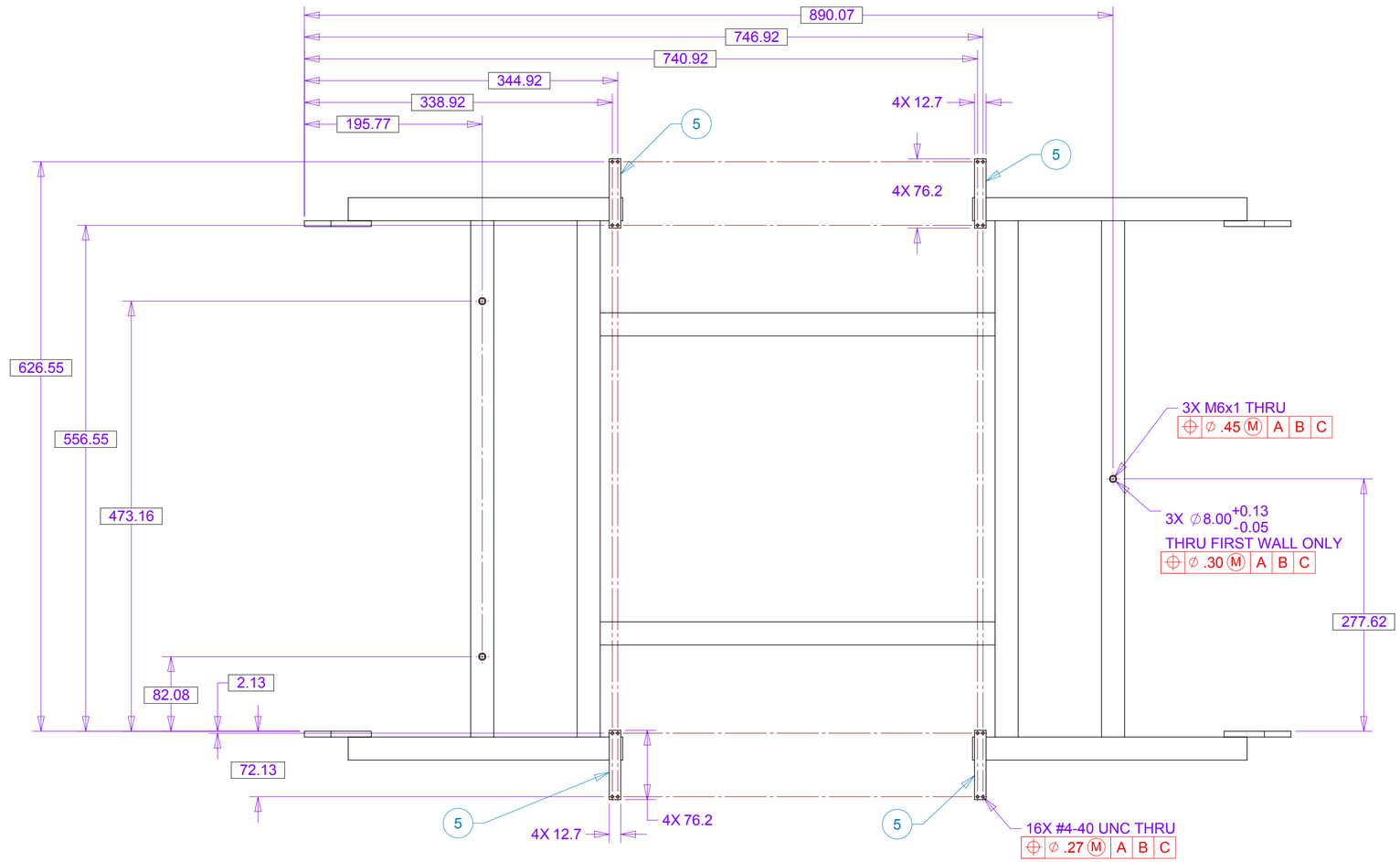

SECTION A-A

HYTEC RELEASED DOCUMENT

UNLESS OTHERWISE SPECIFIED:
DIMENSIONS ARE IN MILLIMETERS
-TOLERANCES-

DECIMALS
X = +/- .5
.X = +/- .1
.XX = +/- .01
.XXX = +/- .001

ANGULAR
.X = +/- 30'
.XX = +/- 15'

SURFACE FINISH = 250

FINISH

THIRD ANGLE PROJECTION

PART NO. 111-PHX-01-5212-1

CAD GENERATED DRAWING,
DO NOT MANUALLY UPDATE
DO NOT SCALE DRAWING

	SIGNATURE	DATE
Designer	Roger L. Smith	3/16/2010
Drawn	Roger L. Smith	3/16/2010
Checked	Walt Sondheim	5/25/2010
Engineer	RJ Ponchione	3/16/2010
Approved	Walt Sondheim	5/25/2010

HYTEC, INC

TITLE
PHENIX CENTRAL UPGRADE
FVTX SYSTEM ASSEMBLING FIXTURE
CARRY FRAME

DWG. NO. 111-PHX-01-5212 | SIZE D | SHEET NO. 2 of 2

SCALE 1:3 | REVISION

THIS DOCUMENT CONTAINS INFORMATION THAT IS THE PROPRIETARY PROPERTY OF HYTEC, INC.
REPRODUCTION, DISCLOSURE, OR RELEASE TO OTHERS, MANUALLY OR ELECTRONICALLY,
IS STRICTLY PROHIBITED WITHOUT THE PRIOR WRITTEN CONSENT OF HYTEC, INC.